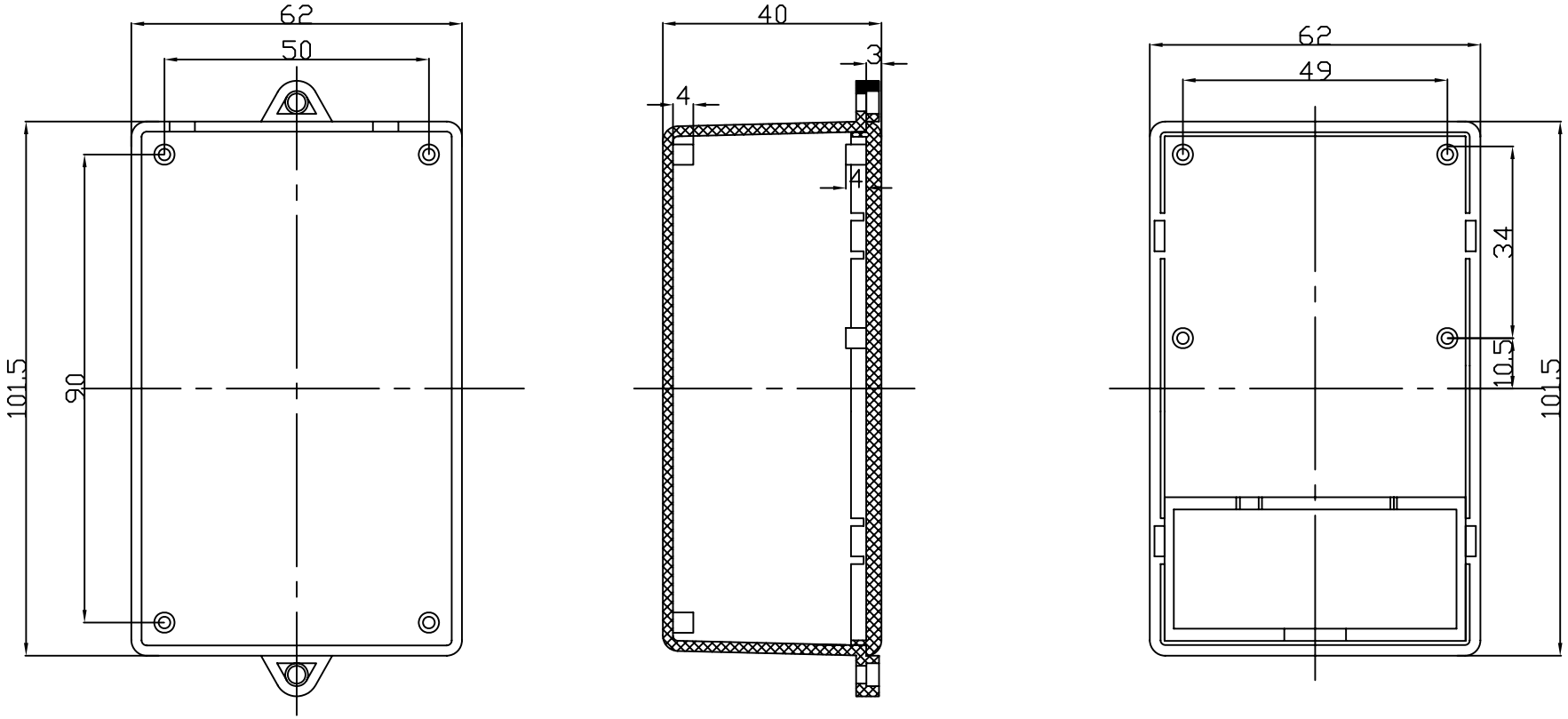

19-26