REV.	ECR/N NO./DESCRIPTION	DATE	DRAWN	CHECKED	APPROVE
D	RD140**	08/12'15	XU	Vito	Barney
E	RD140**	09/09'15	XU	Vito	Barney
F	RD140**	12/23'15	XU	Vito	Barney

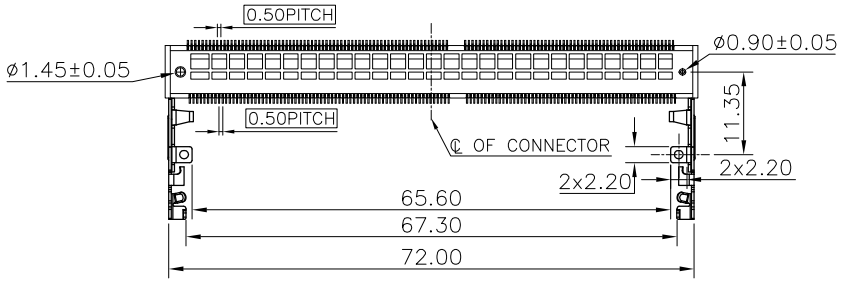

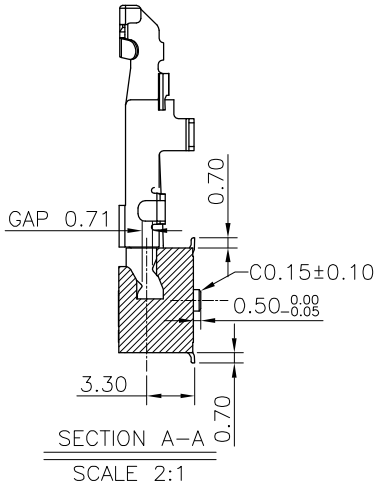

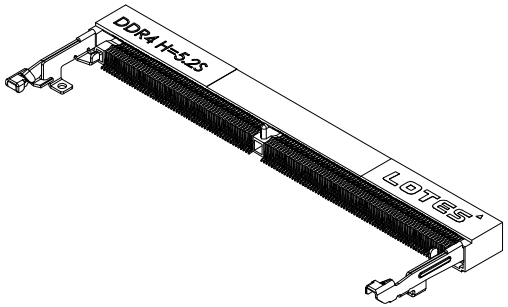

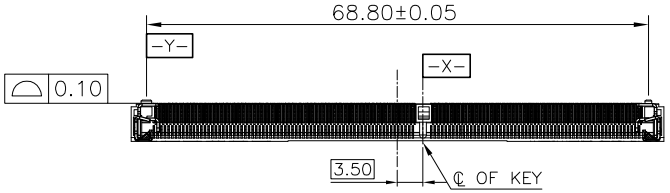

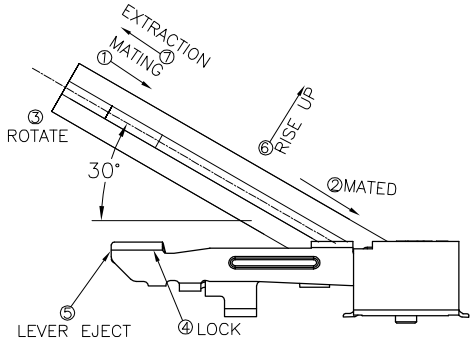

HOW TO MATE AND UNMATE
MATE: ① ⟶ ④
UNMATE: ⑤ ⟶ ⑦
SCALE 2:1

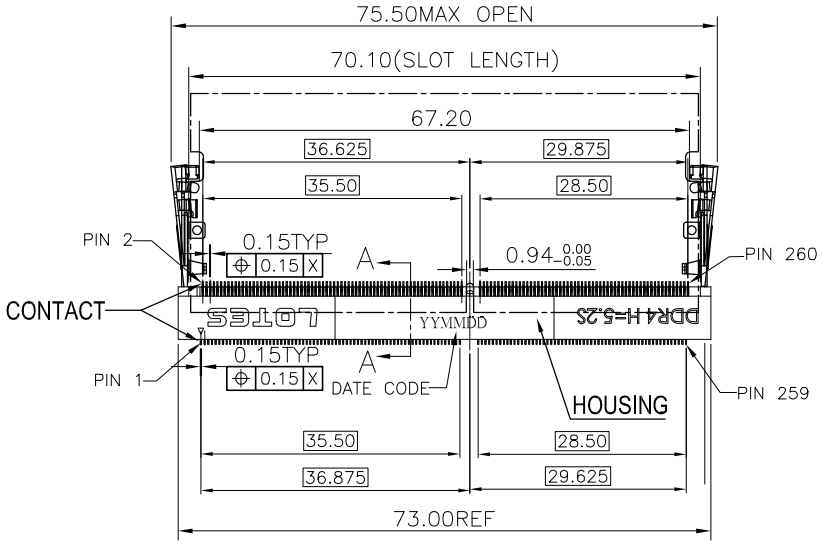

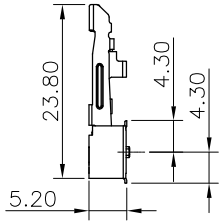

GENERAL TOLERANCES UNLESS SPECIFIED		PART NO.	LOTES
.X ± 0.35	X.° ± 3°	SEE TABLE	
.XX ± 0.25	.X° ± 2°	APPROVED BY: Barney	TITLE: SODDR4 5.2H 260 PIN STD TYPE
.XXX ± 0.15	.XX° ± 1°		
CUSTOMER DRAWING		CHECKED BY: Vito	DWG NO.: AP-ADDR0207
SIZE: A4	UNITS: MM[INCH]	DRAWN BY: XU	SHEET: 1 / 5 · SCALE: 1 : 1 · REV: F

NOTES:

1.MATERIALS:

HOUSING: LCP,UL 94V-0.

CONTACT: BRASS C2680.

LATCH: STAINLESS STEEL SUS301.

2.FINISH:

1)CONTACT: UNDERPLATED NICKEL (DETAL SEE TABLE)
GOLD PLATED ON SOLDER AREA.
GOLD PLATED ON CONTACT AREA.(DETAL SEE TABLE)

2)LATCH:UNDERPLATED NICKEL 50~150u'',MATTE TIN 80u" MIN.

3.ELECTRICAL PERFORMANCE

LLCR INITIAL 50mΩ MAX PER CONTACT.

FINAL ΔLLCR=20mΩ MAX

4.MECHANICAL PERFORMANCE,

MATING & UNMATING FORCE: 6.1 Kgf MAX.

5.IR REFLOW:

THE PEAK TEMPRATURE ON THE BOARD SHALL BE MAINTAINED FOR 10 SECONDS AT 260±5°C.

6. DC: XXXXXX
- DATE
- WEEK
- YEAR

7.PRODUCT NUMBER NOTE:ADDR****-*****
- PACKING DIRECTION
- TYPE SERIAL NUMBER
- HALOGEN FREE
- PRODUCT SERIAL NUMBER
- PRODUCT TYPE
- CONNECTOR

8.RoHS COMPLIANT.
HF COMPLIANT.

TABLE:

NO.	PART NO.	COLOR	AU DESCRIPTION	NICKEL DESCRIPTION
1	ADDR0207-P001A	BLACK	GOLD G/F ON CONTACT AREA	50u" MIN NICKEL UNDER PLATED
			GOLD G/F ON SOLDER AREA	
2	ADDR0207-P002A	BLACK	GOLD 10u" ON CONTACT AREA	
			GOLD G/F ON SOLDER AREA	
3	ADDR0207-P003A	BLACK	GOLD 15u" ON CONTACT AREA	
			GOLD G/F ON SOLDER AREA	
4	ADDR0207-P004A	BLACK	GOLD 30u" ON CONTACT AREA	
			GOLD G/F ON SOLDER AREA	
5	ADDR0207-P016A	BLACK	GOLD 15u" ON CONTACT AREA	90u" MIN NICKEL UNDER PLATED
			GOLD G/F ON SOLDER AREA	

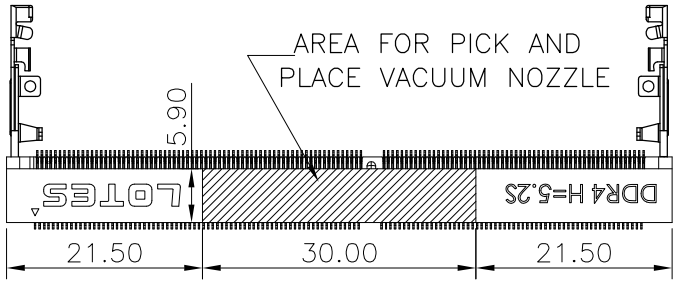

GENERAL TOLERANCES UNLESS SPECIFIED		PART NO. SEE TABLE	LOTES
.X ± 0.35	X.° ± 3°		
.XX ± 0.25	.X° ± 2°	APPROVED BY Barney	TITLE SODDR4 5.2H 260 PIN STD TYPE
.XXX ± 0.15	.XX° ± 1°		
CUSTOMER DRAWING		CHECKED BY Vito	DWG NO. AP-ADDR0207
SIZE A4	UNITS MM[INCH]	DRAWN BY XU	SHEET 2 / 5 · SCALE 5 : 4 · REV F

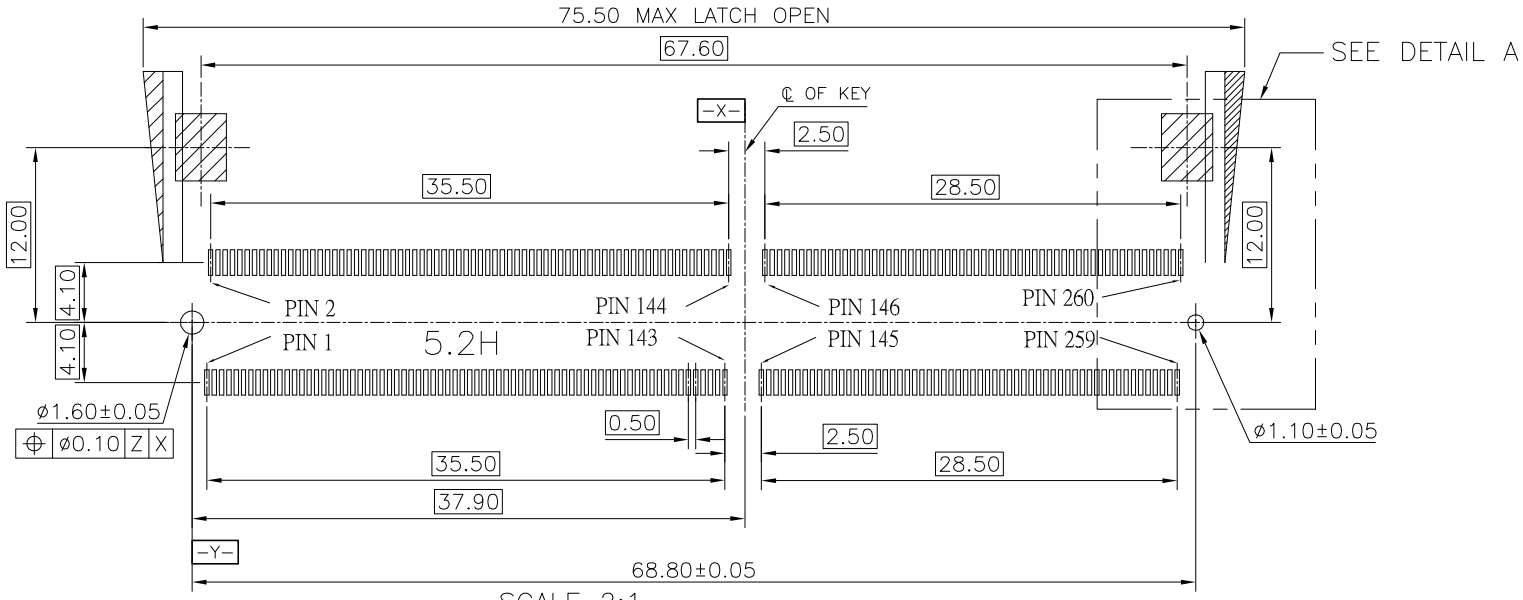

SCALE 2:1

TOP VIEW
RECOMMEND PCB LAYOUT (STANDARD)
THE TOLERANCES UNLESS SPECIFIED IS ±0.05MM

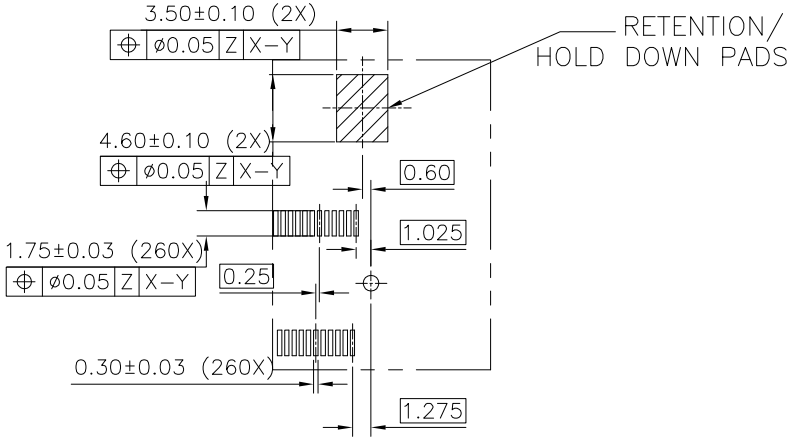

DETAIL A

GENERAL TOLERANCES UNLESS SPECIFIED		PART NO. SEE TABLE	LOTES
.X ± 0.35	X.° ± 3°		
.XX ± 0.25	.X° ± 2°	APPROVED BY Barney	TITLE SODDR4 5.2H 260 PIN STD TYPE
.XXX ± 0.15	.XX° ± 1°		
CUSTOMER DRAWING		CHECKED BY Vito	DWG NO. AP-ADDR0207
SIZE A4	UNITS MM[INCH]	DRAWN BY XU	SHEET 3 / 5 · SCALE 1 : 1 · REV F

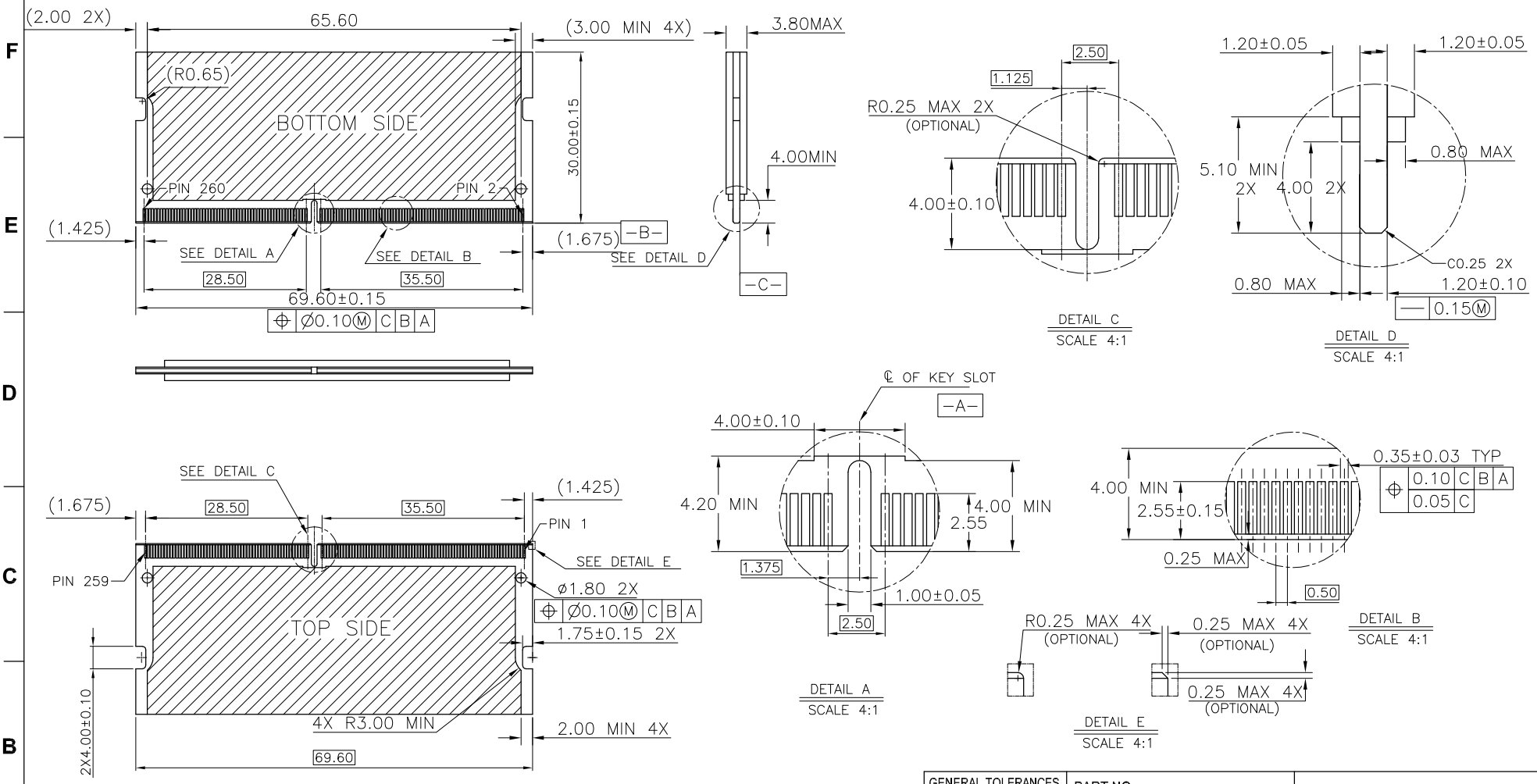

NOTES:
1. TOLERANCE ON ALL DIMENSIONS ±0.15 UNLESS OTHERWISE SPECIFIED;
2. PCB THICKNESS APPLIES ACROSS TABS AND INCLUDES PLATING AND/OR METALIZATION;
3. FINISH OF PAD:Au PLATING 30u" min OVER NI PLATING 80u" min;
4. NO BURR;
5. CHAMFER 0.25mm max. X 45° IF EXIST.

GENERAL TOLERANCES UNLESS SPECIFIED		PART NO. SEE TABLE	LOTES
.X ± 0.35	X.° ± 3°		
.XX ± 0.25	.X° ± 2°	APPROVED BY Barney	TITLE SODDR4 5.2H 260 PIN STD TYPE
.XXX ± 0.15	.XX° ± 1°		
CUSTOMER DRAWING		CHECKED BY Vito	DWG NO. AP-ADDR0207
SIZE A4	UNITS MM[INCH]	DRAWN BY XU	SHEET 4 / 5 · SCALE 1 : 1 · REV F

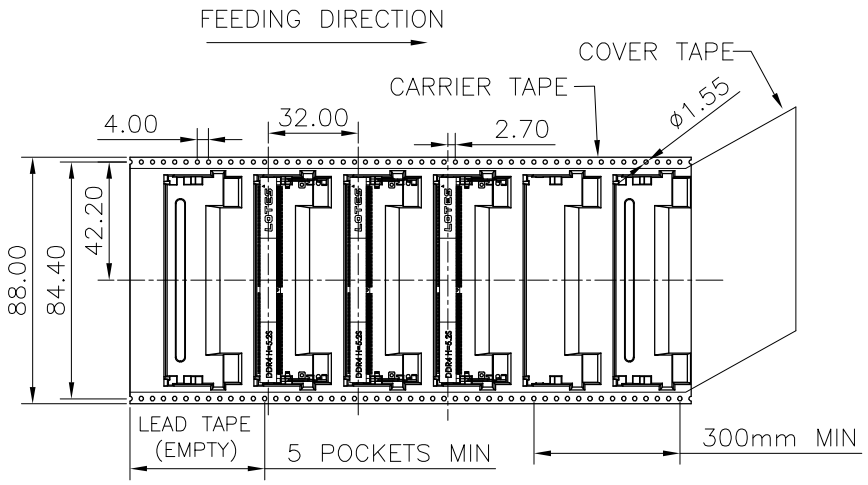

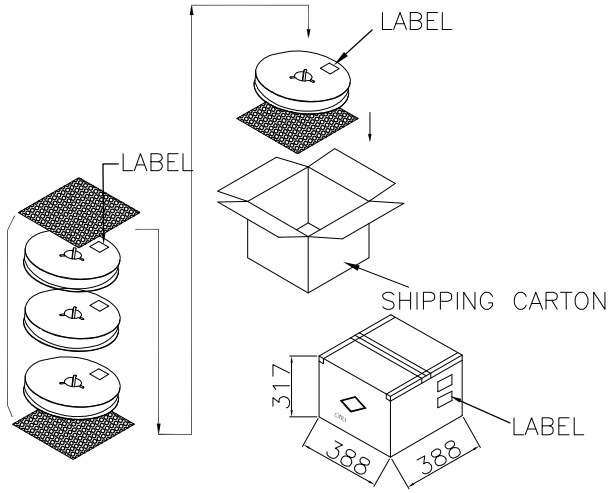

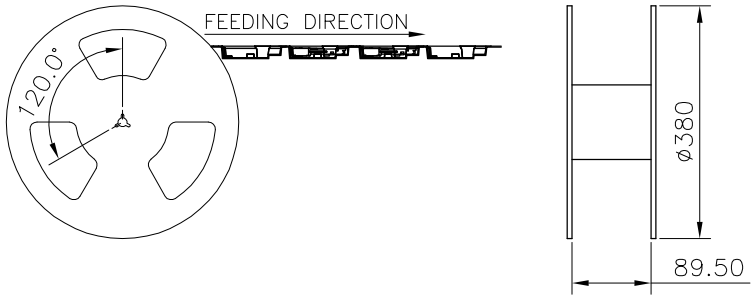

NOTES:
1. MATERIAL :
   1.1 CARRY TAPE: PS
   1.2 COVER TAPE: PET
   1.3 SHIPPING CARTON: CORRUGATED FIBER
2. DIMENSION :
   2.1 REEL: W=88.0, øA=380
   2.2 SHIPPING CARTON: L=388, W=388, H=317 (INNER)
3. QUANTITY :
   3.1 PRIMARY PACKING: 300 PCS/REEL
   3.2 SECONDARY PACKING: 3 REELS/CARTON(900PCS)
4. PEELING RESISTANCE: 20gf~120gf.
5. PEELING SPEED: 300mm/minutes.

GENERAL TOLERANCES UNLESS SPECIFIED		PART NO. SEE TABLE	LOTES
.X ± 0.35	X.° ± 3°		
.XX ± 0.25	.X° ± 2°	APPROVED BY Barney	TITLE SODDR4 5.2H 260 PIN STD TYPE
.XXX ± 0.15	.XX° ± 1°		
CUSTOMER DRAWING		CHECKED BY Vito	DWG NO. AP-ADDR0207
SIZE	UNITS	DRAWN BY XU	SHEET 5 / 5 · SCALE N/A · REV F
A4	MM[INCH]		