SSOP-16

16-Lead Shrink Small Outline Package
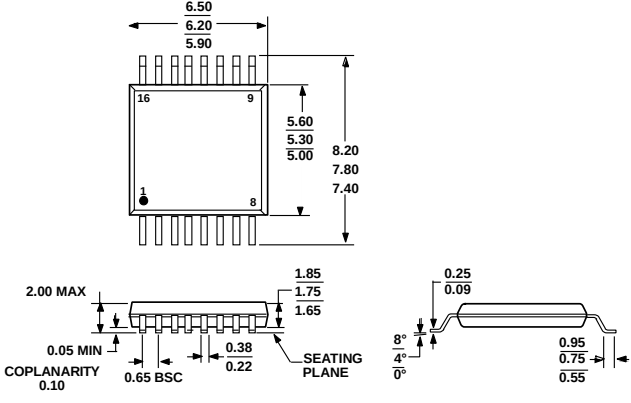
Dimensions shown in millimeters