DIP-14 (201.14-8, 202.14-9)
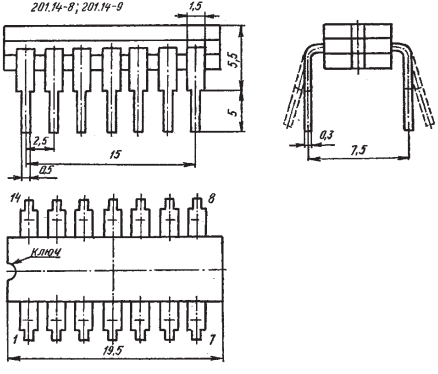
Dimensions shown in mm